circutec

Product data sheet

Regenerative turbine pump

Single/multi-stage vertical pump without shaft sealing

Description

- Regenerative turbine pump
- Vertical close-coupled pump
- Seal-less
- Range of submersible depths
- Steep characteristic curve

Markets and applications

Industrial cooling

- Chillers/cooling machines
- Cooling appliances

Plastics processing

- Tool tempering for injection moulding

Temperature control

- Laboratory tempering devices
- Hot-water tempering devices
- Oil tempering devices
- Tool tempering for plastic injection moulding

Get in touch with us!

Speck Pumpen Walter Speck GmbH & Co. KG
Regensburger Ring 6–8
91154 Roth
Deutschland

Make a non-binding enquiry

info@speck.de

circutec

Technical data

International system of units, alternating current 50 Hz

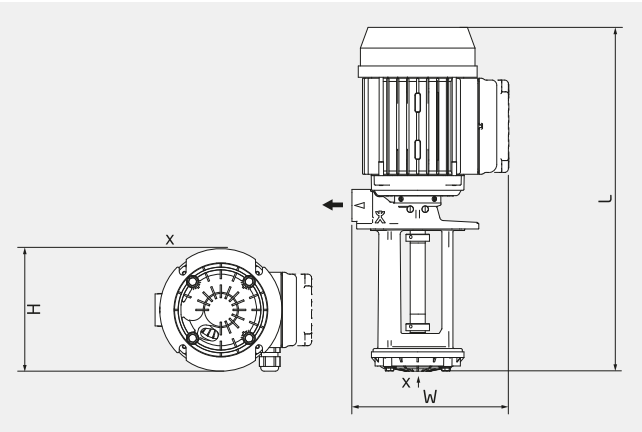

H	130 mm
W	148–176 mm
L	324–445 mm

Dimensions may vary depending on the design.

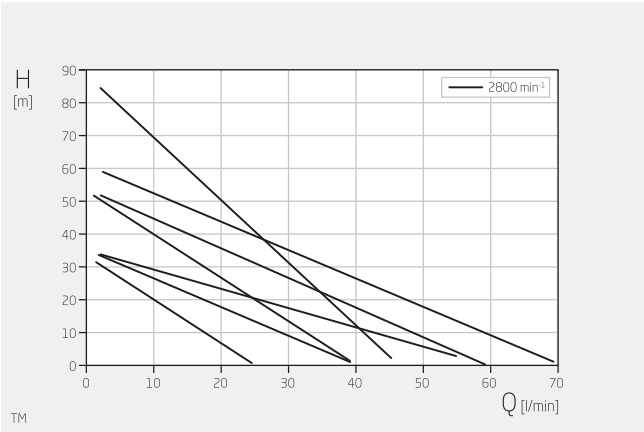

Specifications apply for water at 20°C and nominal speed.

Product type	Regenerative turbine pump
Shaft sealing	None
Pump design	Close-coupled pump, vertical
Typical media	Water max. +90 °C Oil max. +150 °C, on request max. +200 °C
Self-priming	No
Variable speed	Frequency-converter-compatible motor on request
Total head	2–85 m
Flow rate	5–70 l/min
Nominal pressure	PN 10
Motor current type	1~ 3~
Type of motor	Asynchronous motor Speed-controlled synchronous motor available on request
Nominal motor power	0.5 – 1.0 kW
Nominal motor speed	2800 rpm
Pressure-side connection design	Threaded
Pressure-side connection size	G ¾"
Material designs	TM-201/.../TM-602: Brass TM-701: Bronze
Explosion protection	None

circutec

Technical data

International system of units, alternating current 60 Hz

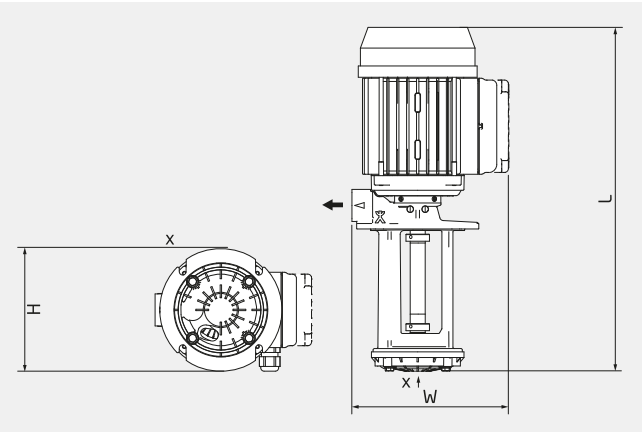

H	130 mm
W	148–176 mm
L	324–445 mm

Dimensions may vary depending on the design.

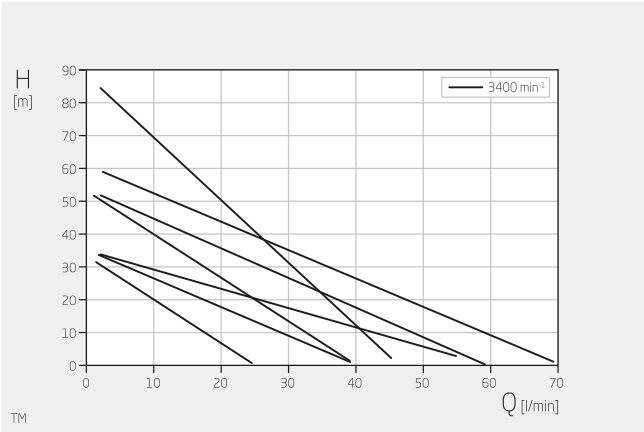

Specifications apply for water at 20°C and nominal speed.

Product type	Regenerative turbine pump
Shaft sealing	None
Pump design	Close-coupled pump, vertical
Typical media	Water max. +90 °C Oil max. +150 °C, on request max. +200 °C
Self-priming	No
Variable speed	Frequency-converter-compatible motor on request
Total head	2–85 m
Flow rate	5–70 l/min
Nominal pressure	PN 10
Motor current type	1~ 3~
Type of motor	Asynchronous motor Speed-controlled synchronous motor available on request
Nominal motor power	0.5 – 1.0 kW
Nominal motor speed	3400 rpm
Pressure-side connection design	Threaded
Pressure-side connection size	G ¾"
Material designs	TM-201/.../TM-602: Brass TM-701: Bronze
Explosion protection	None

circutec

Technical data

Anglo-American system of measurement, alternating current 60 Hz

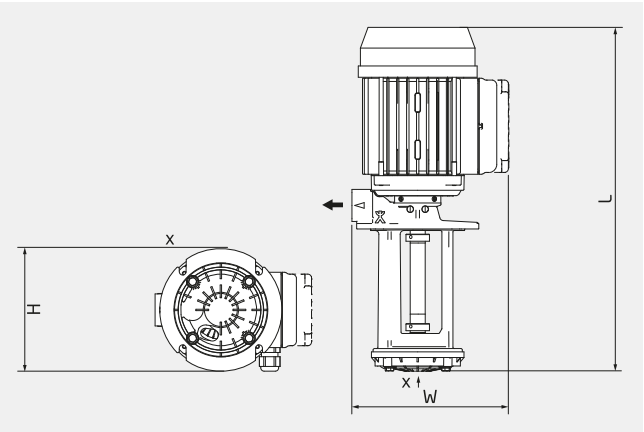

H	5,12 inch
W	5,83–6,93 inch
L	12,76–17,52 inch

Dimensions may vary depending on the design.

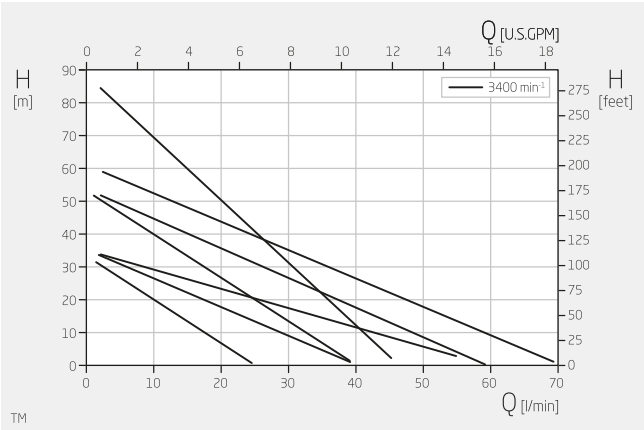

Specifications apply for water at 68°F and nominal speed.

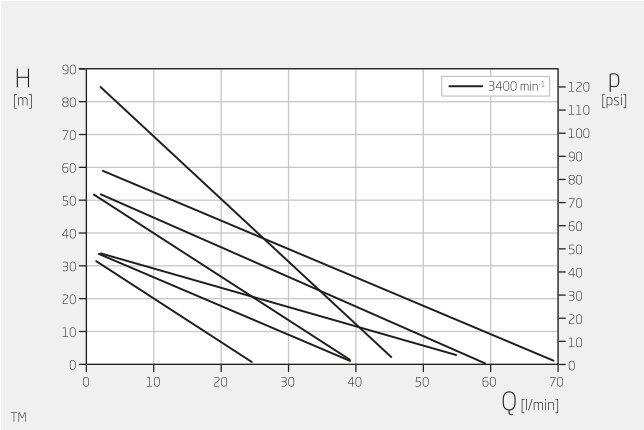

Specifications apply for water at 68°F and nominal speed.

Product type	Regenerative turbine pump
Shaft sealing	None
Pump design	Close-coupled pump, vertical
Typical media	Water max. +194 °F Oil max. +302 °F, on request max. +392 °F
Self-priming	No
Variable speed	Frequency-converter-compatible motor on request
Total head	7–279 ft
Flow rate	1.3–18.5 USGPM
Nominal pressure	PN 10
Motor current type	1~ 3~
Type of motor	Asynchronous motor Speed-controlled synchronous motor available on request
Nominal motor power	0.7 – 1.34 HP
Nominal motor speed	3400 rpm
Pressure-side connection design	Threaded
Pressure-side connection size	G ¾"
Material designs	TM-201/.../TM-602: Brass TM-701: Bronze
Explosion protection	None