circutec

Product data sheet

Regenerative turbine pump

Vertical pump without shaft sealing

Description

- Regenerative turbine pump
- Vertical close-coupled pump
- Seal-less
- Range of submersible depths
- Steep characteristic curve

Markets and applications

Industrial cooling

- Chillers/cooling machines
- Cooling appliances

Plastics processing

- Tool tempering for injection moulding

Temperature control

- Laboratory tempering devices
- Hot-water tempering devices
- Oil tempering devices
- Tool tempering for plastic injection moulding

Get in touch with us!

Speck Pumpen Walter Speck GmbH & Co. KG
Regensburger Ring 6–8
91154 Roth
Deutschland

Make a non-binding enquiry

info@speck.de

circutec

Technical data

International system of units, alternating current 50 Hz

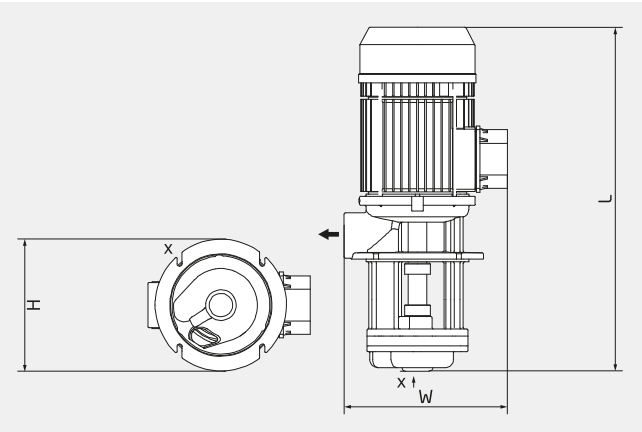

H	180 mm
W	219 mm
L	480–558 mm

Dimensions may vary depending on the design.

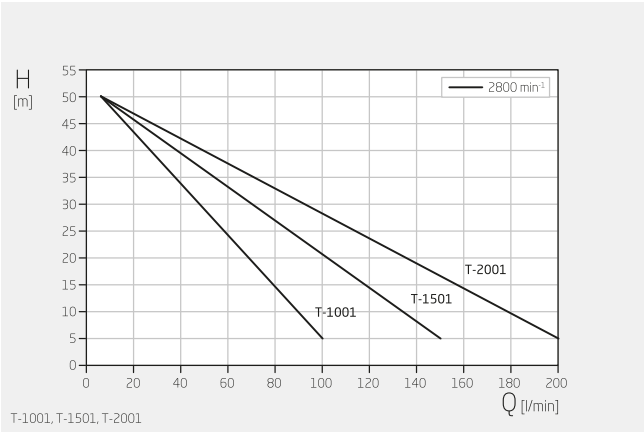

Specifications apply for water at 20°C and nominal speed.

Product type	Regenerative turbine pump
Shaft sealing	None
Pump design	Close-coupled pump, vertical
Typical media	Water max. +90 °C Oil max. +150 °C, on request max. +200 °C
Self-priming	No
Variable speed	Frequency-converter-compatible motor on request
Total head	5–200 m
Flow rate	20–200 l/min
Nominal pressure	PN 10
Motor current type	3~
Type of motor	Asynchronous motor Speed-controlled synchronous motor available on request
Nominal motor power	2.2 – 2.8 kW
Nominal motor speed	2800 rpm
Pressure-side connection design	Threaded
Pressure-side connection size	G 1 ¼"
Material designs	Brass
Explosion protection	None

circutec

Technical data

International system of units, alternating current 60 Hz

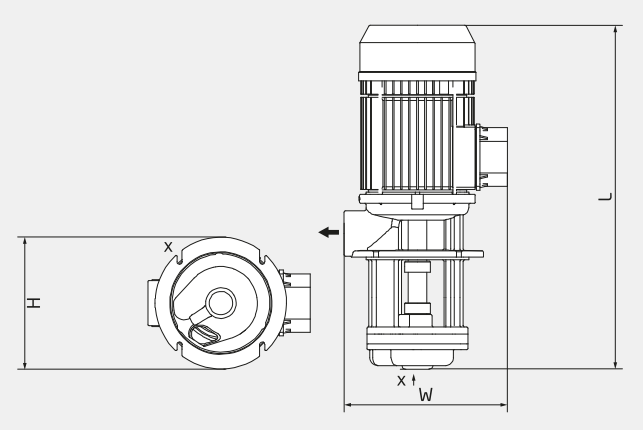

H	180 mm
W	219 mm
L	480–558 mm

Dimensions may vary depending on the design.

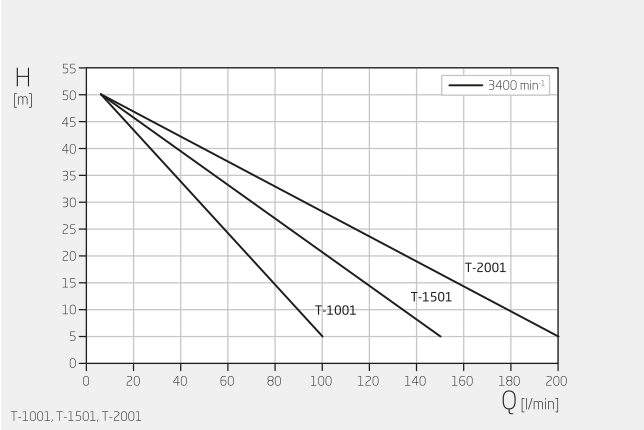

Specifications apply for water at 20°C and nominal speed.

Product type	Regenerative turbine pump
Shaft sealing	None
Pump design	Close-coupled pump, vertical
Typical media	Water max. +90 °C Oil max. +150 °C, on request max. +200 °C
Self-priming	No
Variable speed	Frequency-converter-compatible motor on request
Total head	5–200 m
Flow rate	20–200 l/min
Nominal pressure	PN 10
Motor current type	3~
Type of motor	Asynchronous motor Speed-controlled synchronous motor available on request
Nominal motor power	2.2 – 2.8 kW
Nominal motor speed	3400 rpm
Pressure-side connection design	Threaded
Pressure-side connection size	G 1 ¼"
Material designs	Brass
Explosion protection	None

circutec

Technical data

Anglo-American system of measurement, alternating current 60 Hz

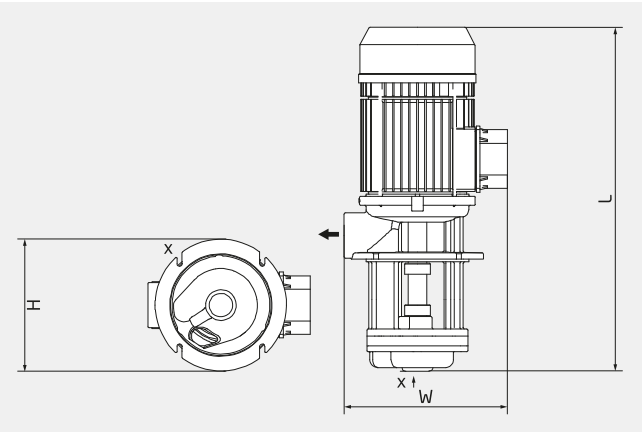

H	7,09 inch
W	8,62 inch
L	18,90–21,97 inch

Dimensions may vary depending on the design.

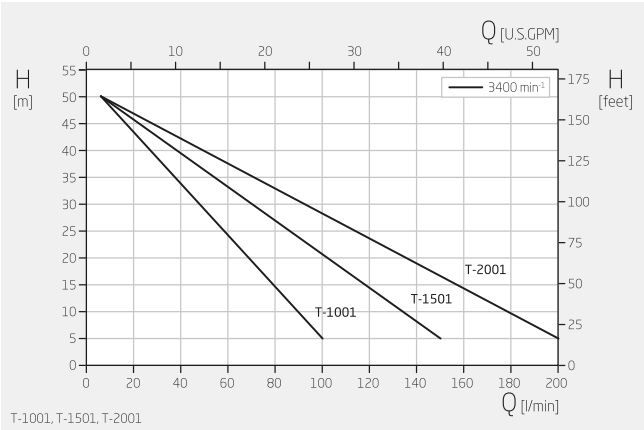

Specifications apply for water at 68°F and nominal speed.

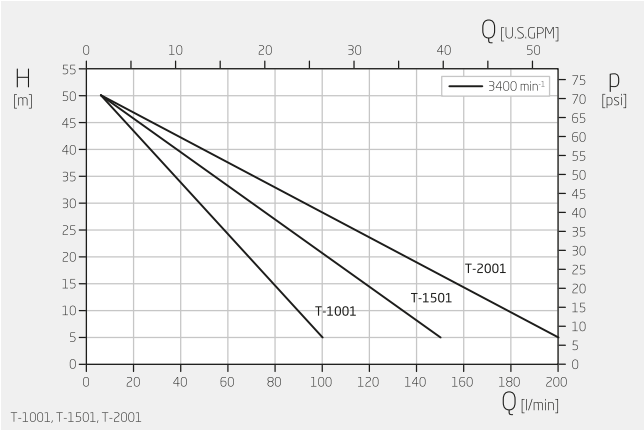

Specifications apply for water at 68°F and nominal speed.

Product type	Regenerative turbine pump
Shaft sealing	None
Pump design	Close-coupled pump, vertical
Typical media	Water max. +194 °F Oil max. +302 °F, on request max. +392 °F
Self-priming	No
Variable speed	Frequency-converter-compatible motor on request
Total head	16–656 ft
Flow rate	5.3–52.8 USGPM
Nominal pressure	PN 10
Motor current type	3~
Type of motor	Asynchronous motor Speed-controlled synchronous motor available on request
Nominal motor power	3.0 – 3.8 HP
Nominal motor speed	3400 rpm
Pressure-side connection design	Threaded
Pressure-side connection size	G 1 ¼"
Material designs	Brass
Explosion protection	None